hear back

stereo live analog

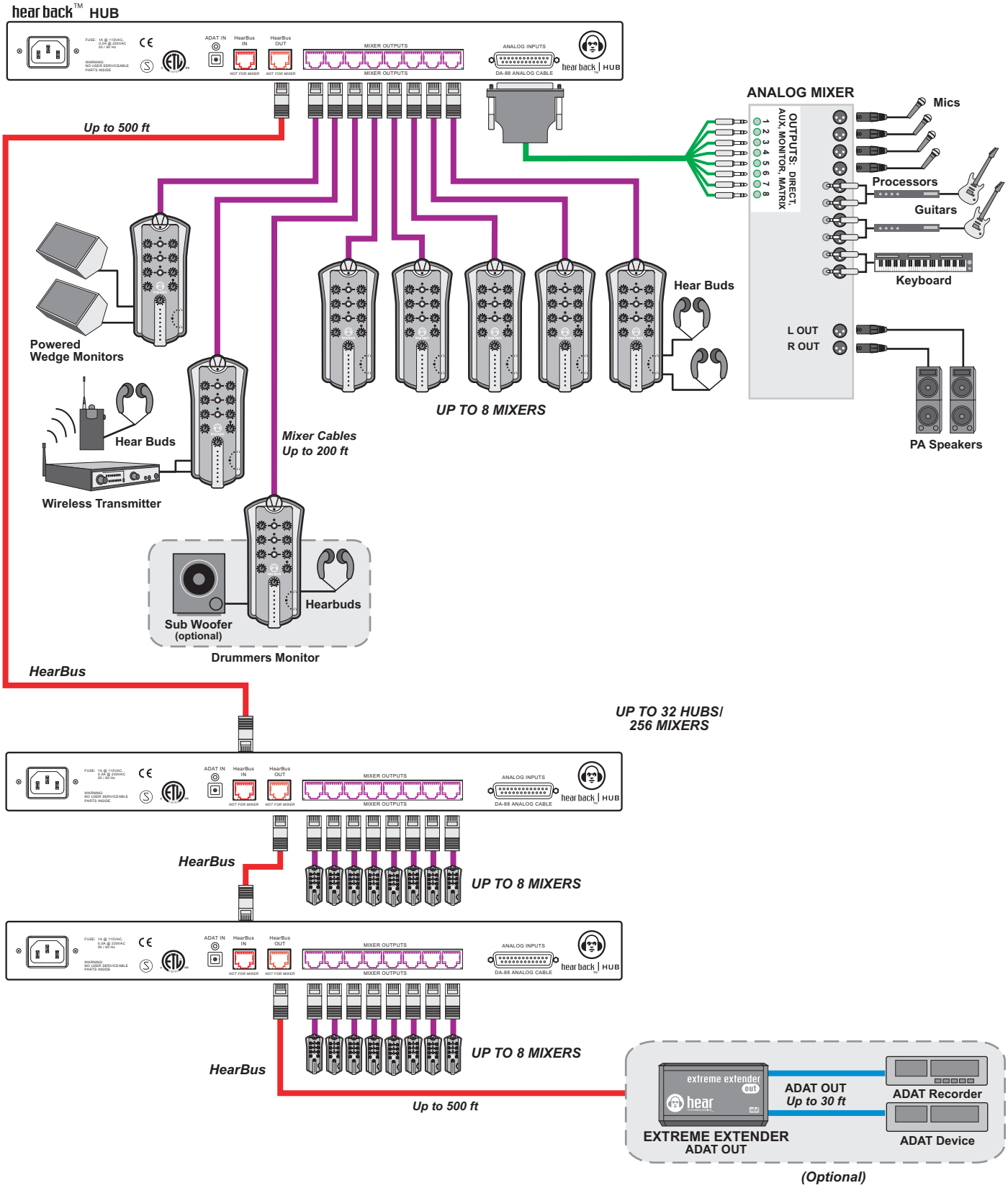

hear TECHNOLOGIES™
1-256-922-1200